CITY OF DARDENNE PRAIRIE
2032 HANLEY ROAD
DARDENNE PRAIRIE, MO 63368

BOARD OF ALDERMEN
WORKSHOP AGENDA
FEBRUARY 03, 2016
5:30 p.m.

CALL MEETING TO ORDER

PLEDGE OF ALLEGIANCE

ITEMS FOR DISCUSSION AND CONSIDERATION

1. Dardenne Greenway at BaratHaven Western Overlook Repair (Kehoe)
2. Umpire in Chief Contract (Mayor)
3. Short Term Goals (0 – 3 year projects)
4. Long Term Goals (3 – 10 year projects)
5. Review of Board of Aldermen Meeting Agenda (02-03-16)

STAFF COMMUNICATIONS

1. City Attorney
2. City Engineer
3. Staff
4. Aldermen
5. Mayor

CLOSED SESSION

Roll call vote to hold closed session pursuant to RSMo 610.021 section _____

Litigation and Privileged Communications (1)
Real Estate (2)
Personnel (3)
Labor (9)
Bid Specs (11)
Audit (17)

RETURN TO REGULAR MEETING AGENDA

ADJOURNMENT

RBA FORM (OFFICE USE ONLY)
MEETING DATE: 02/03/2016
Regular ( ) Work Session (x)
ATTACHMENT: YES (x) NO ( )
Contract ( ) Ordinance ( ) Other (x)

Request for Board Action
By: Staff

Ward 3

Description: **Dardenne Greenway at BaratHaven**
Western Overlook Repair

- **Recommendation:** **Staff – Approve (x) Disapprove ( )**

- **Summary/Explanation:**

The western overlook at the Dardenne Greenway at BaratHaven park was damaged during the last Dardenne Creek flood event the last week of December 2015 (attached Exhibit A).

Approximately 50 percent of the western overlook was damaged (most of the curved portion of the overlook wall). The stability of the wall is currently being evaluated by a licensed engineer. The engineering report from this evaluation will be available by the Board of Aldermen meeting on February 3, 2016.

Options for the repair of the western overlook include the following:

1. **Rebuild the western overlook wall to match the original construction (attached Exhibit 1).**
2. **Remove remaining curved portion of damaged wall and rebuild the western overlook to be similar to the existing southern overlook with the addition of a black aluminum fence installed in front of a capped toe wall (attached Exhibit 2).**
3. **Other…**

Depending upon (1) associated cost and (2) approval of Great Rivers Greenway, this work can be completed by volunteers, by direction of the Mayor or through an open bid process.

- **Budget Impact:** (revenue generated, estimated cost, CIP item, etc.)

TBD

RBA requested by: Luke R. Kehoe Date: 01/28/2016

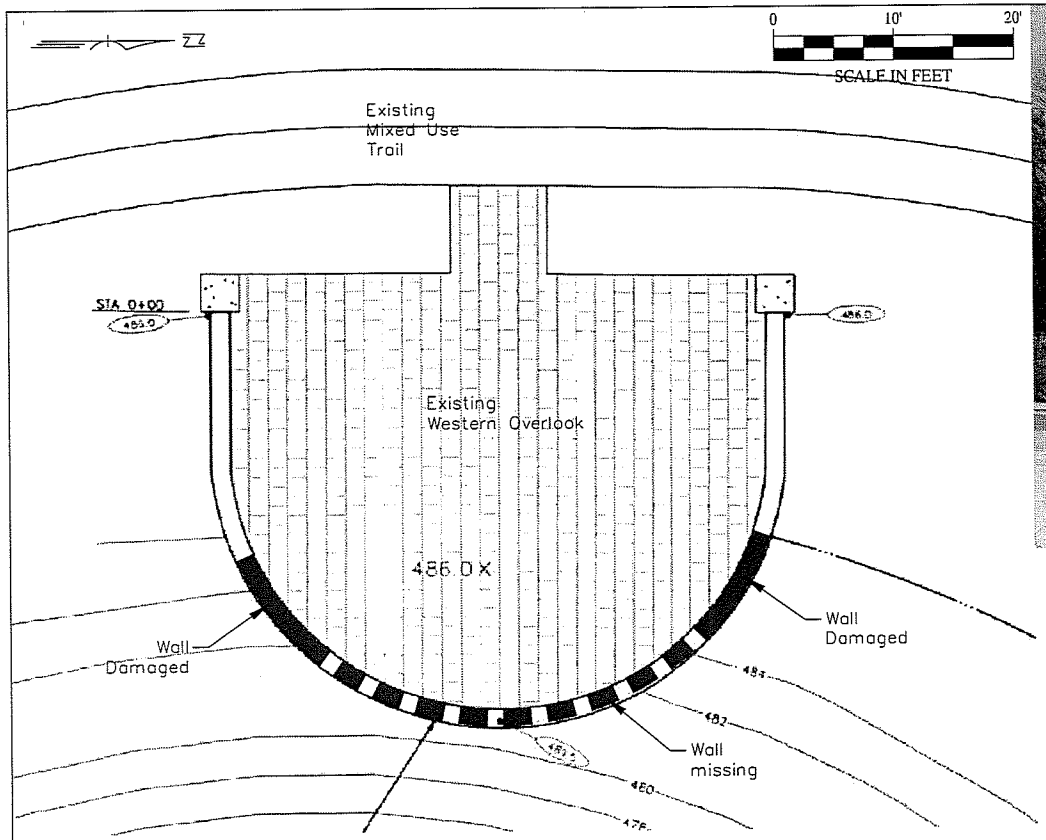

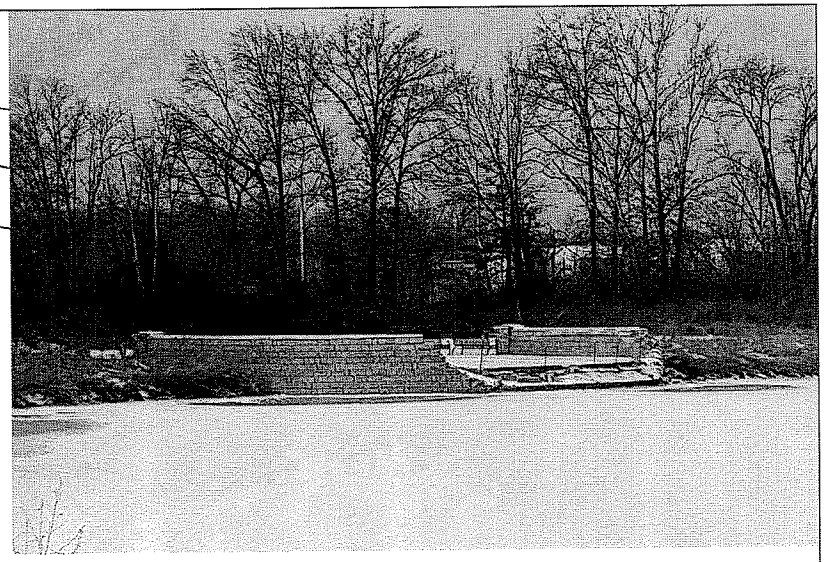

KEC

KEHOE ENGINEERING COMPANY, INC.
2920 Sandtrap Drive
Dardenne Prairie, MO 63368-9740
636.978.6008 636.898.0923 fax
www.KehoeEngineering.com

Western Overlook Flood Damage - Exhibit A
Dardenne Greenway at BaratHaven
Dardenne Prairie, Misouri

DATE: January 28, 2016	SCALE: 1"=10'	PROJ.# 970156	SHEET 1 OF 1

PRELIMINARY
NOT FOR
CONSTRUCTION

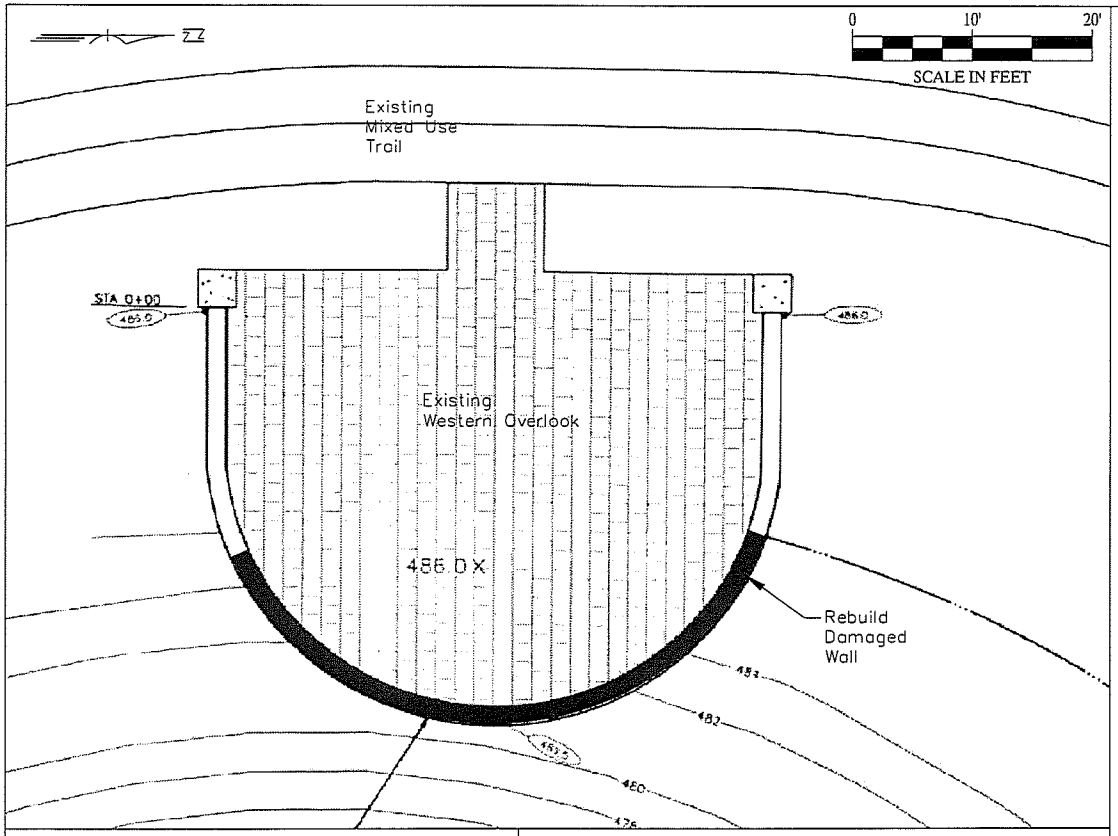

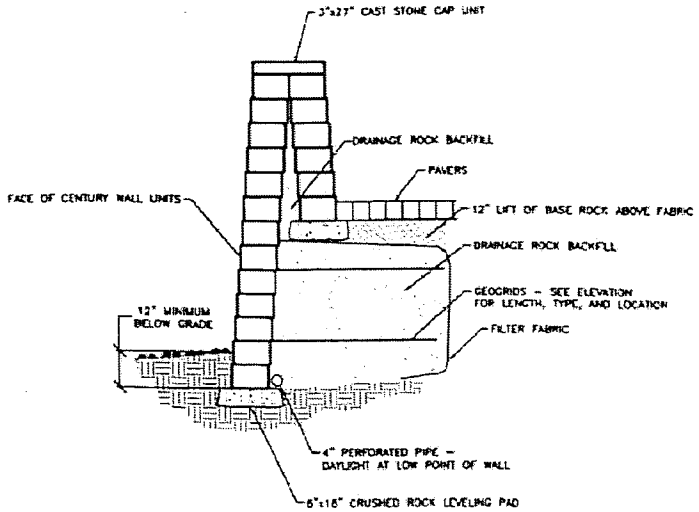

MIDWEST CAST STONE: PRECAST CAPS COLOR: TAC

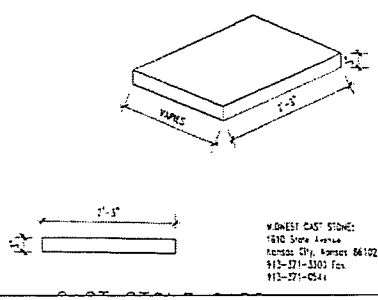

MIDWEST CAST STONE:
1610 State Avenue
Kansas City, Kansas 66102
913-371-3303 fax
913-371-0544

KEC

KEHOE ENGINEERING COMPANY, INC.
2920 Sandtrap Drive
Dardenne Prairie, MO 63368-9740
636.978.6008 636.898.0923 fax
www.KehoeEngineering.com

Western Overlook Repair - Option 1
Dardenne Greenway at BaratHaven
Dardenne Prairie, Misouri

DATE: January 28, 2016	SCALE: 1"=10'	PROJ.# 970156	SHEET 1 OF 1

PRELIMINARY
NOT FOR
CONSTRUCTION

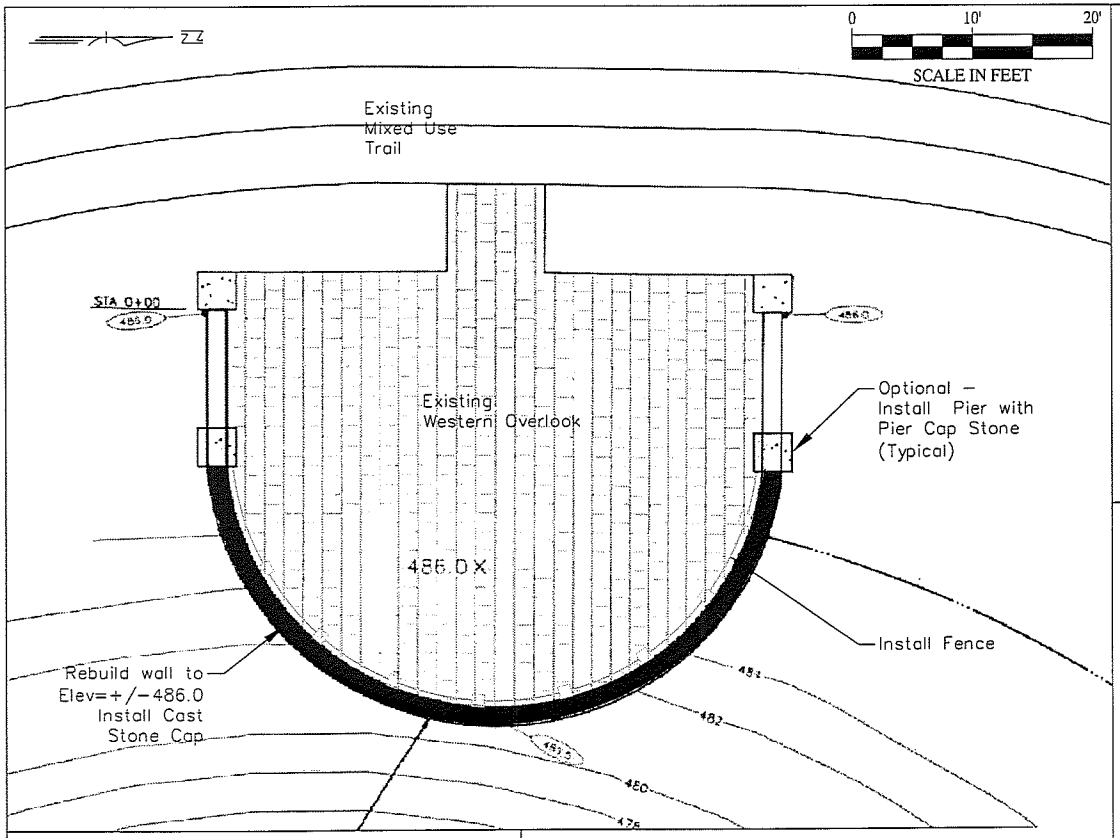

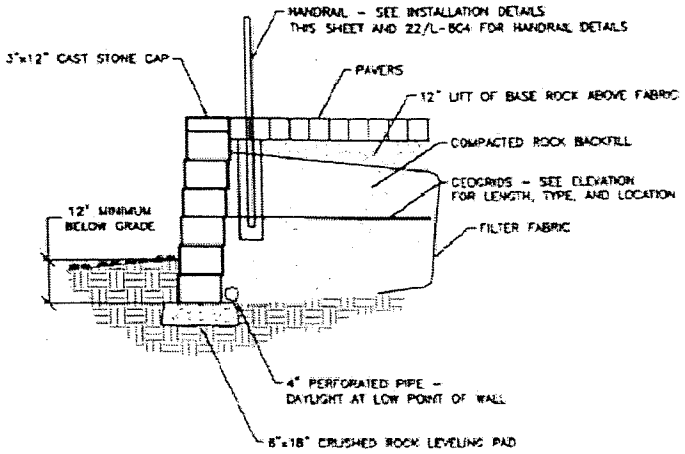

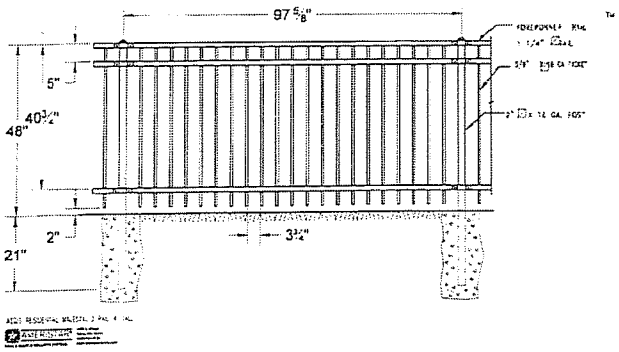

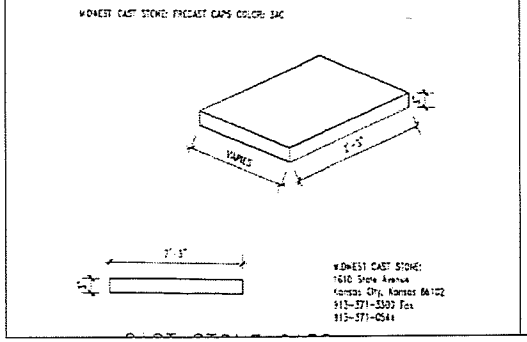

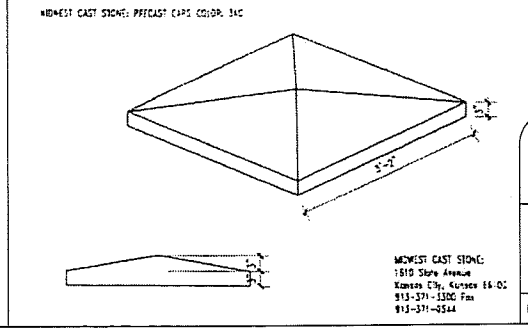

KEC

KEHOE ENGINEERING COMPANY, INC.
2920 Sandtrap Drive
Dardenne Prairie, MO 63368-9740
636.978.6008 636.898.0923 fax
www.KehoeEngineering.com

Western Overlook Repair - Option 2
Dardenne Greenway at BaratHaven
Dardenne Prairie, Missouri

DATE: January 28, 2016	SCALE: 1"=10'	PROJ.# 970156	SHEET 1 OF 1

PRELIMINARY
NOT FOR
CONSTRUCTION

RBA FORM (OFFICE USE)
MEETING DATE: **February 4, 2016**
Regular (X) Work Session (X)
ATTACHMENT: YES (X) NO ( )
Contract (X) Ordinance (X) Other ( )

Request for Board Action
By: Mayor ZUCKER

Ward: All

- **Description: Authorize Contract with John Hecei for services as UMPIRE in CHIEF pursuant to Mun. Code 130.150 B.4.e.**

Recommendation: Staff – Approve (X) Disapprove ( )

- The Dardenne Prairie Parks & Recreation Department's Youth Baseball, Softball, and Coach Pitch/T-Ball program for the 2016 season includes approximately 12 weeks from April through mid-July.
- An important ingredient in the program is the Umpire in Chief who recruits, trains, schedules and supervises the umpires for all home games.
- Three experienced UICs were solicited to submit offers to become Dardenne Prairie's UIC for the 2016 season.
- Proposals were structured on the basis of rates per component of the program (training, scheduling, supervising, and umpire compensation) with Not to Exceed upper price limits to account for variables in the number of games played based on number of registered players and other factors such as weather.
- Low bidder was John Hecei ($16,440); Second low was Steve Schrage ($17,610); Third low was Rich Fohey ($17,780)
- Municipal code requires BOA approval for contracts over $10,000.
- Proposed contract is attached.

- **Budget Impact: $16,440 [Not to exceed]**

RBA requested by: Mayor Zucker

CONTRACT

AGREEMENT, made this _____day of **February**, **2016** between The City of Dardenne Prairie, MO (the CITY) and ***WMH Sports Services*** - ***John Hecei***.

Owner of **WMH Sports Services - John Hecei** is designated as the UMPIRE IN CHIEF (UIC) for the Dardenne Prairie Parks & Recreation Department's Youth Baseball, Softball, and Coach Pitch/T-Ball program for the 2016 season which includes approximately 12 weeks from April through mid-July. The UIC is not an employee of the CITY but is an independent contractor of the CITY. All umpires engaged by the UIC to provide umpire services in fulfillment of this AGREEMENT are considered independent contractors of the UIC and are neither employees nor independent contractors of the CITY.

UIC's Responsibilities

The UIC has the following responsibilities:

a. Participate in New Horizon Youth Sports League UIC meetings
b. Recruit people to serve as umpires**
c. Design training for umpires
d. Train all umpires
e. Schedule all umpires (including rainouts)
f. Meet nightly to check on umpires and distribute equipment
g. Ensure all fields are set for all games.
h. Ensure all games start on time and end on time
i. Collect all game cards
j. Closing of the park (locking gates and doors and turning off of lights)
k. Communicate with recreation department
l. Supervise umpires
m. Fill in as an umpire when needed at no additional cost to CITY.
n. Two weeks before the start of the season, provide CITY a list of all umpires and the rate of pay for each.

***The CITY must first review and approve the application of all umpires before they are scheduled for work as umpires under this AGREEMENT. Disapproval of any application by the CITY will be communicated to the UIC who is responsible for termination of umpires. The CITY reserves the right to bar any umpire deemed by the CITY to be unsuitable for duty.*

Payment

The City of Dardenne Prairie will pay ***WMH Sports Services*** for his services as **the Umpire in Chief**, as follows:

a. Training Sessions: **$42.50** per supervisor per session **[Not to exceed $300**, based on total cost of $600 shared with Lake St. Louis]
b. Umpire Scheduling: **$85** per week regardless of number of games [**Not to exceed $1020**]
c. Umpire In Chief Supervision: **$42.50** per game slot [**Not to exceed 144 slots =$6120**]
d. Payment for Services of Umpires: **Not to exceed $9,000**

TOTAL CONTRACT PRICE: NOT TO EXCEED $16,440.

CITY's Responsibilities

The CITY will be responsible for the following items:

a. Preparation of playing fields for the first game of the night
b. Providing of umpire gear (face mask, chest protector, shin guards, indicator, and plate brush)
c. Providing of umpire shirt and hat (if umpire needs replacement shirt or hat throughout the season they will be responsible for the replacement of the item)
    i. Shirts and hats to be returned to the CITY at end of season
d. Payment to Umpire in Chief for UIC services including payment for services of the umpires; the UIC will then be solely responsible for paying umpires. CITY will make payments on March 1, April 1, May 1, June 1 and July 1 for services expected to be rendered in the remainder of each month. An accounting and final payment will be made at the end of the season to adjust for any balance due from the CITY or refund due from ***WMH Sports Services*** - ***John Hecei***.

City of Dardenne Prairie
Purchaser

_____
Signature

2032 Hanley Rd.
Address

Dardenne Prairie, MO 63368
City/State/Zip

636-755-5308
Phone

WMH Sports Services - John Hecie
Contractor

_____
Signature

1821 Plaza Ct,
Address

St. Charles MO 63303
City/State/Zip

636-875-4485
Phone

CITY OF DARDENNE PRAIRIE
2032 HANLEY ROAD
DARDENNE PRAIRIE, MO 63368

BOARD OF ALDERMEN
MEETING AGENDA
FEBRUARY 03, 2016
7:00 p.m.

CALL MEETING TO ORDER

PLEDGE OF ALLEGIANCE

INVOCATION

ROLL CALL
- Mayor Zucker
- Alderman Klingerman
- Alderman Nay
- Alderman Gotway
- Alderman Koch
- Alderman Stipes
- Alderman Santos

OPEN FORUM

CONSENT AGENDA
1. Board of Aldermen Minutes 1-20-16 and 1-28-16 Special
2. Workshop Summary 1-20-16
3. Expenditures for Approval 2-3-16
4. Fireworks Display – Morning Star Church – 05-05-16 (06-30-16 Rain Date)

ITEMS REMOVED FROM CONSENT AGENDA

NEW BUSINESS

1. **Bill #16-02**
   AN ORDINANCE OF THE CITY OF DARDENNE PRAIRIE, MISSOURI, AUTHORIZING THE MAYOR TO NEGOTIATE AND EXECUTE A CONTRACT FOR UMPIRE SERVICES FOR THE 2016 YOUTH BASEBALL AND SOFTBALL SEASON

STAFF COMMUNICATIONS
1. City Attorney
2. City Engineer
3. Staff
4. Aldermen
5. Mayor

CLOSED SESSION

Roll call vote to hold closed session pursuant to RSMo 610.021 section _____

- Litigation and Privileged Communications (1)
- Real Estate (2)
- Personnel (3)
- Labor (9)
- Bid Specs (11)
- Audit (17)

RETURN TO REGULAR MEETING AGENDA

ADJOURNMENT

The City of Dardenne Prairie Board of Aldermen meeting was called to order at 7:00 p.m. The meeting was held at Dardenne Prairie City Hall located at 2032 Hanley Road.

The meeting was opened with the Pledge of Allegiance followed by the invocation by Alderman Blake Nay.

Present at roll call were Mayor Zucker, Aldermen Klingerman, Koch, Santos, Nay and Gotway. Alderman Stipes was absent. Also present were City Clerk Kim Clark, City Engineer Luke Kehoe and City Attorney John Young. Staff member Jeff Amelong and was also in attendance.

OPEN FORUM - No one present to speak.

CONSENT AGENDA

1. Board of Aldermen Minutes 1-6-16
2. Workshop Summary 1-6-16
3. Expenditures for Approval 1-20-16
4. Treasurer's Report – As of December 31, 2015

With no objections, the consent agenda was approved and adopted.

NEW BUSINESS

A motion was made by Alderman Gotway, Seconded by Alderman Nay to read Bill #16-01 for the first time by short title only. Motion passed unanimously.

Bill #16-01

AN ORDINANCE OF THE CITY OF DARDENNE PRAIRIE, MISSOURI, AMENDING SECTION 500.055 OF THE MUNICIPAL CODE BY DELETING IT IN ITS ENTIRETY; ENACTING, IN LIEU THEREOF, A NEW SECTION 500.055; PROVIDING REGULATIONS FOR THE CONSTRUCTION OF ONE – AND TWO-FAMILY DWELLINGS IN THE CITY; AND OTHER MATTERS RELATED THERETO

A motion was made by Alderman Klingerman, Seconded by Alderman Gotway to read Bill #16-01 for the second time by short title only. Motion passed unanimously.

A motion was made by Alderman Nay, Seconded by Alderman Gotway to put Bill #16-01 to final vote. Motion passed unanimously.

Roll call was as follows:	Alderman Koch – Aye	Alderman Klingerman- Aye
	Alderman Gotway - Aye	Alderman Santos - Aye
	Alderman Nay – Aye	Alderman Stipes - Absent

Mayor Zucker declared Bill #16-01 passed and designated it to be Ordinance #1790.

A motion was made by Alderman Gotway, Seconded by Alderman Santos to hold a closed session pursuant to RSMo 610.021 section (1) Litigation and Privileged Communications. Motion passed unanimously. Roll call was as follows:

Alderman Koch – Aye	Alderman Klingerman – Aye
Alderman Stipes – Absent	Alderman Nay – Aye
Alderman Santos – Aye	Alderman Gotway – Aye

CLOSED SESSION

A motion was made by Alderman Klingerman, Seconded by Alderman Gotway to return to regular meeting agenda. Motion passed unanimously.

The meeting was adjourned at 7:36 p.m.

Respectfully submitted,

_____

Kim Clark, City Clerk

SPECIAL BOARD OF ALDERMEN MINUTES **JANUARY 28, 2016**

The City of Dardenne Prairie Board of Aldermen held a dinner for representatives of the Dardenne Prairie Home Owners Associations from 6:00 p.m. to 8:00 p.m. The dinner was held at Dardenne Prairie City Hall located at 2032 Hanley Road.

Those in attendance included Mayor Zucker, Aldermen Klingerman, Koch, Santos and Nay. Also present were City Clerk Kim Clark and City Engineer Luke Kehoe.

Respectfully submitted,

_____

Kim Clark, City Clerk

WORKSHOP SUMMARY **JANUARY 20, 2016**

The City of Dardenne Prairie workshop session was called to order at 5:32 p.m. The meeting was held at Dardenne Prairie City Hall located at 2032 Hanley Road.

The meeting was opened with the Pledge of Allegiance.

The following were in attendance: Mayor Zucker, Aldermen Koch, Gotway, Klingerman, Nay, and Santos. Also present were City Clerk Kim Clark, City Engineer Luke Kehoe and City Attorney John Young. Staff member Jeff Amelong was also in attendance.

ITEMS FOR DISCUSSION AND CONSIDERATION

1. Chief Mike Marlo – Wentzville Fire Protection District (Mayor)
2. Ballfield Bleachers
3. Short Term Goals (0 – 3 year projects)
4. Long Term Goals (3 – 10 year projects)
5. Review of Board of Aldermen Meeting Agenda (01-20-16)

STAFF COMMUNICATIONS

Mayor Zucker mentioned the following:

- Dardenne Prairie will host the monthly Mayors/City Administrators luncheon on January 21
- Dardenne Prairie will host a dinner on January 28th for the Home Owners Association Presidents
- Congratulated Jeff Amelong on 10 years of service to the city
- The city has purchased temporary signage to assist in promoting new businesses
- The FEMA maps have been approved
- He will be scheduling meetings with the homeowners at 1616 & 1618 Brett Ridge Drive in the near future

ADJOURNMENT

A motion was made by Alderman Gotway, Seconded by Alderman Santos to adjourn the meeting at 6:42 p.m. Motion passed unanimously.

Respectfully submitted,

_____

Kim Clark, City Clerk

EXPENDITURES FOR APPROVAL
2/3/2016

1	Alderman Blake Nay	February, 2016	375.00
2	Alderman Dan Koch	February, 2016	375.00
3	Alderman Doug Santos	February, 2016	375.00
4	Alderman Elliott Stipes	February, 2016	375.00
5	Alderman John Gotway	February, 2016	375.00
6	Alderman Kevin Klingerman	February, 2016	375.00
7	Bank of America	Semi-Annual COP Payment	67,386.50
8	BNY Mellon	Annual Administration Fee: COP Series 2009	850.00
9	Cuivre River Electric	Light at Weldon Spring	38.24
10	Cuivre River Electric	Georgetown Park	69.66
11	Cuivre River Electric	St. Williams street lights	58.50
12	Cuivre River Electric	Traffic Signal at Feise/Hanley	74.00
13	Duckett Creek Sanitary District	City Hall Service to12/31/15	21.75
14	Family Support Payment Center	2/12 & 2/26 Payroll	294.46
15	GFI Digital	Computer Maintenance thru 2/12/16	800.00
16	Holiday Inn - Columbia	Conference Lodging: Easley	351.69
17	Insurance: Anthem Blue Cross/Blue Shield	Health: February, 2016	4,713.04
18	Insurance: Principal Life	Life: February, 2016	178.51
19	Mayor David C. Zucker	February, 2016	1,000.00
20	Payroll	Payroll: 01/29/16	15,785.43
21	PNC	Credit Card Charges	2,375.76
22	PWSD #2	City Hall Fountain to 12/18/15	30.33
23	PWSD #2	City Hall to 12/18/15	24.60
24	S&K Manufacturing	Corrugated Signs for new openings	230.00
25	Sam's	Mayors/CA & HOA Dinner Supplies	188.11
26	Sandie Evans	Park Activity Refund	50.00
27	The Law Office of Dennis Chassaniol	Municipal Judge: February, 2016	400.00
28	UMB	Semi Annual Bryan Road NID payment	110,877.50
29	UMB Bank, NA	January, 2016 TDD Sales Tax Payment	26,078.41
			234,126.49

Approved by Board of Aldermen 02-03-16

Mayor David C. Zucker

DARDENNE PRAIRIE

Single Occasion Fireworks Permits

A permit to conduct a fireworks display will be issued only to a certified fireworks display operator and shall be valid for only one date and location

I. Event Information

Name of Event: MSC-Celebrate Recovery's 3rd Anniv. Date of Event: 5MAY2016, RAIN DATE: 30JUN2016
Start Time: 8:30 PM Finish Time: 9:30 PM
Location of Display: Morning Star Church - West Field
Property Owner: Morning Star Church
Address: 1600 Feise Road, Dardenne Prairie, MO 63368
Phone Number: (636) 561-5680

II. Display Supplier/Operator Information

Company Name: Archer Heibel (individual, no co.)
Address: 37 Georgetown Circle, O'Fallon, MO 63368
Phone Number: (573) 268-3749

Archer S. Heibel
Printed Name
(573) 268-3749
Phone Number
28JAN2016
Date
Archer S. Heibel
Signature

BILL NO. 16-02

ORDINANCE NO. _____

AN ORDINANCE OF THE CITY OF DARDENNE PRAIRIE, MISSOURI, AUTHORIZING THE MAYOR TO NEGOTIATE AND EXECUTE A CONTRACT FOR UMPIRE SERVICES FOR THE 2016 YOUTH BASEBALL AND SOFTBALL SEASON.

WHEREAS, the City has undertaken to operate the Youth Baseball and Softball program in Dardenne Prairie for the 2016 season and has invited interested parties to present their qualifications to organize, recruit, train, schedule and supervise umpires for the 2016 season;

WHEREAS, the City received proposals from three prospective Umpires in Chief;

WHEREAS, the City considered the experience and competence of each prospective Umpire in Chief and costs associated with each proposal, each offeror's capacity to perform and proximity to and familiarity with the area to which the work pertains.

WHEREAS, all offerors appear qualified, however, John Hecei proposed the lowest overall cost;

WHEREAS, the Board of Aldermen finds and determines that it is in the best interest of the citizens of Dardenne Prairie to obtain the services of John Hecei as Umpire in Chief;

NOW THEREFORE, BE IT ORDAINED BY THE BOARD OF ALDERMEN OF THE CITY OF DARDENNE PRAIRIE, MISSOURI, AS FOLLOWS:

SECTION 1. That the Mayor is hereby authorized, empowered and directed to accept, negotiate, execute, acknowledge, deliver and administer on behalf of the City a contract for the services of Umpire in Chief with John Hecei in substantially the form which is attached hereto as **Exhibit A** and incorporated by reference herein.

SECTION 2. That the Mayor be and is hereby authorized to make expenditures for the services and related expenses, if any, on **Exhibit A**, a copy of which is attached hereto and incorporated by reference herein, in the amount provided on the attached.

SECTION 3. Effective Date: This Ordinance shall be in full force and take effect from and after its final passage and approval.

SECTION 4. Savings Clause: Nothing contained herein shall in any manner be deemed or construed to alter, modify, supersede, supplant or otherwise nullify any other Ordinance of the City or the requirements thereof whether or not relating to or in any manner connected with the subject matter hereof, unless expressly set forth herein.

SECTION 5. Severability Clause: If any term, condition, or provision of this Ordinance shall, to any extent, be held to be invalid or unenforceable, the remainder hereof shall be valid in all other respects and continue to be effective and each and every remaining provision hereof shall be valid and shall be enforced to the fullest extent permitted by law, it being the intent of the Board of Aldermen that it would have enacted this Ordinance without the invalid or unenforceable provisions. In the event of a subsequent change in applicable law so that the provision which had been held invalid is no longer invalid, said provision shall thereupon return to full force and effect without further action by the City and shall thereafter be binding.

Read two times, passed, and approved this _____ day of _____, 2016.

_____
As Presiding Officer and as Mayor

Attest:

_____
City Clerk

Approved this _____ day of _____, 2016.

_____
Mayor

Attest:

_____
City Clerk

"Exhibit A"

CONTRACT

AGREEMENT, made this _____day of **February**, **2016** between The City of Dardenne Prairie, MO (the CITY) and ***WMH Sports Services*** - ***John Hecei***.

Owner of **WMH Sports Services - John Hecei** is designated as the UMPIRE IN CHIEF (UIC) for the Dardenne Prairie Parks & Recreation Department's Youth Baseball, Softball, and Coach Pitch/T-Ball program for the 2016 season which includes approximately 12 weeks from April through mid-July. The UIC is not an employee of the CITY but is an independent contractor of the CITY. All umpires engaged by the UIC to provide umpire services in fulfillment of this AGREEMENT are considered independent contractors of the UIC and are neither employees nor independent contractors of the CITY.

UIC's Responsibilities

The UIC has the following responsibilities:

a. Participate in New Horizon Youth Sports League UIC meetings
b. Recruit people to serve as umpires**
c. Design training for umpires
d. Train all umpires
e. Schedule all umpires (including rainouts)
f. Meet nightly to check on umpires and distribute equipment
g. Ensure all fields are set for all games.
h. Ensure all games start on time and end on time
i. Collect all game cards
j. Closing of the park (locking gates and doors and turning off of lights)
k. Communicate with recreation department
l. Supervise umpires
m. Fill in as an umpire when needed at no additional cost to CITY.
n. Two weeks before the start of the season, provide CITY a list of all umpires and the rate of pay for each.

***The CITY must first review and approve the application of all umpires before they are scheduled for work as umpires under this AGREEMENT. Disapproval of any application by the CITY will be communicated to the UIC who is responsible for termination of umpires. The CITY reserves the right to bar any umpire deemed by the CITY to be unsuitable for duty.*

Payment

The City of Dardenne Prairie will pay ***WMH Sports Services*** for his services as **the Umpire in Chief**, as follows:

a. Training Sessions: **$42.50** per supervisor per session [**Not to exceed $300**, based on total cost of $600 shared with Lake St. Louis]
b. Umpire Scheduling: **$85** per week regardless of number of games [**Not to exceed $1020**]
c. Umpire In Chief Supervision: **$42.50** per game slot [**Not to exceed 144 slots =$6120**]
d. Payment for Services of Umpires: **Not to exceed $9,000**

TOTAL CONTRACT PRICE: NOT TO EXCEED $16,440.

CITY's Responsibilities

The CITY will be responsible for the following items:

a. Preparation of playing fields for the first game of the night
b. Providing of umpire gear (face mask, chest protector, shin guards, indicator, and plate brush)
c. Providing of umpire shirt and hat (if umpire needs replacement shirt or hat throughout the season they will be responsible for the replacement of the item)
    i. Shirts and hats to be returned to the CITY at end of season
d. Payment to Umpire in Chief for UIC services including payment for services of the umpires; the UIC will then be solely responsible for paying umpires. CITY will make payments on March 1, April 1, May 1, June 1 and July 1 for services expected to be rendered in the remainder of each month. An accounting and final payment will be made at the end of the season to adjust for any balance due from the CITY or refund due from ***WMH Sports Services*** - ***John Hecei***.

City of Dardenne Prairie	***WMH Sports Services - John Hecie***
Purchaser	**Contractor**
Signature	**Signature**
2032 Hanley Rd.	1821 Plaza Ct,
Address	**Address**
Dardenne Prairie, MO 63368	St. Charles MO 63303
City/State/Zip	**City/State/Zip**
636-755-5308	636-875-4485
Phone	Phone